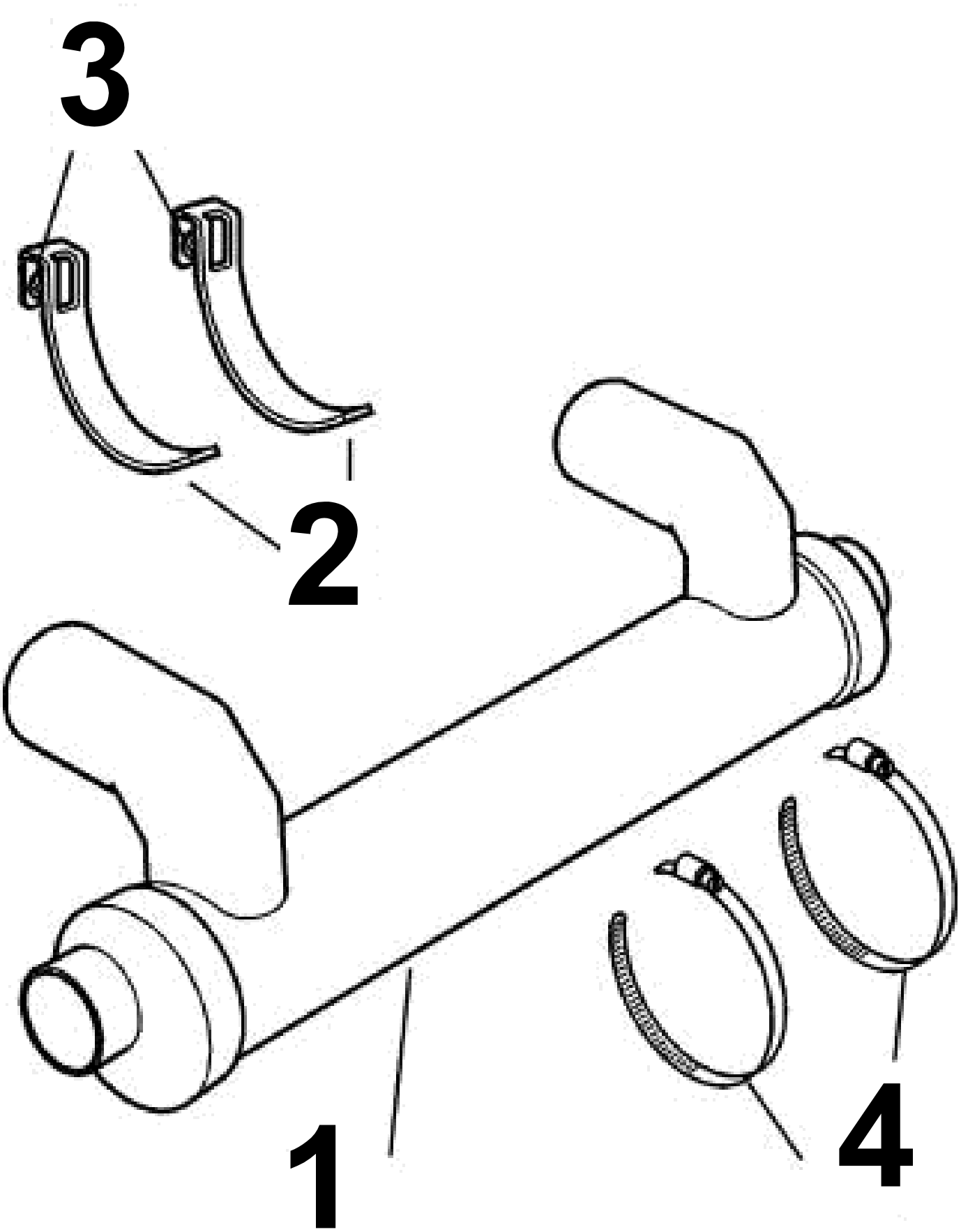
3
2
1
4

MUFFLER KIT (PJX ONLY)

REF	PART NO.	QTY	DESCRIPTION	SEE SEC.	NOTES
	3856714	1	Muffler		
			Bulletin 48-41	48-41-EN	PJX Power Jet Muffler Kit
1	3856909	1	Muffler		
2	3856712	2	Bracket		
3	946471	2	Screw		
4	961678	2	Hose clamp		